AC318-VD4Z

8 MP Turret Camera

Key Features

- 8.29 MP high performance CMOS
- Auto focus
- 3840 × 2160 resolution
- 2.7 mm to 13.5 mm motorized vari-focal lens
- EXIR 2.0, smart IR, up to 60 m IR distance
- OSD menu, DNR
- 4 in 1 video output (switchable TVI/AHD/CVI/CVBS)
- IP67
- Up the coax (UTC-C)

AC318-VD4Z

8 MP Turret Camera

Camera	
Image Sensor	8.29 megapixel progressive scan CMOS
Frame Rate	TVI: 8MP@12.5fps, 8MP@15fps, 5MP@20fps, 4MP@25fps, 4MP@30fps, 2MP@25fps, 2MP@30fps CVI: 8MP@12.5fps, 8MP@15fps AHD: 5MP@20fps CVBS: 960H P/N
Resolution	3840 (H) × 2160 (V)
Min. illumination	Color: 0.01 Lux @ (F1.2, AGC ON), 0 Lux with IR
Shutter Time	PAL: 1/12.5s to 1/50, 000 s NTSC: 1/15 s to 1/50, 000 s
Lens	2.7 mm to 13.5 mm motorized vari-focal lens
Horizontal Field of View	108.1° to 45.6°
Lens Mount	Φ 14
Day & Night	IR cut filter
Angle Adjustment	Pan: 0° to 360°; Tilt: 0° to 75°; Rotate: 0° to 360°
Synchronization	Internal synchronization
DWDR (Digital Wide Dynamic Range)	105 dB
Menu	
AGC	Yes
D/N Mode	Auto/Color/BW (Black and White)
White Balance	Auto/Manual
BLC	Yes
DWDR (Digital Wide Dynamic Range)	Yes
Functions	Brightness, Sharpness, DNR, Mirror, Smart IR
Interface	
Video Output	1 HD analog output
Switch Button	TVI/AHD/CVI/CVBS
General	
Operating Conditions	-40 °C to 60 °C (-40 °F to 140 °F), humidity: 90% or less (non-condensation)
Power Supply	9 VDC to 15 VDC
Power Consumption	Max. 8.6W
Protection Level	IP67
Material	Metal
IR Range	Up to 60 m
Communication	Up the coax, Protocol: UTC-C (TVI output)
Dimensions	134.3 mm × 123.86 mm × 110.24 mm (5.29" × 4.88" × 4.34")
Weight	Approx. 580 g (1.28 lb.)

AC318-VD4Z

8 MP Turret Camera

Dimension

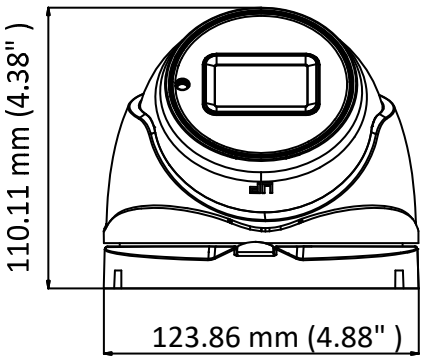

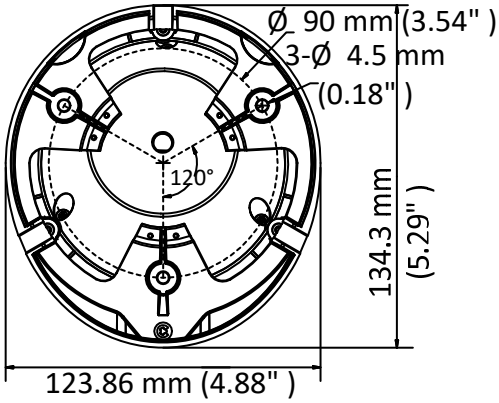

Accessory

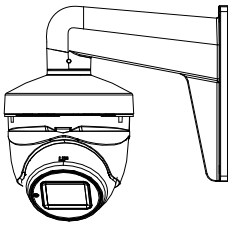

1273ZJ-130-TRL
Wall Mount

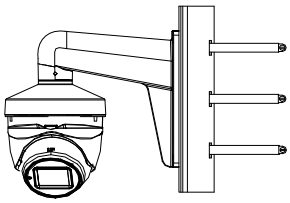

1275ZJ-SUS
Vertical Pole Mount

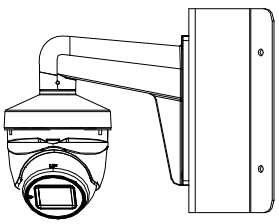

1276ZJ-SUS
Corner Mount

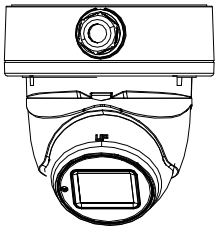

1280ZJ-M
Junction Box

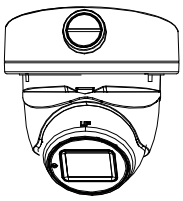

1281ZJ-M
Inclined Ceiling Mount