NC328-MB

8 MP Network Bullet Camera

Key Features

- Up to 8 megapixel high resolution
- Max. 3840 × 2160 @20fps
- 2.8 mm/4 mm/6 mm/8 mm/12 mm fixed lens, optional
- H.265, H.265+, H.264+, H.264
- 120dB Wide Dynamic Range
- 3D Digital Noise Reduction
- 12 VDC & PoE (802.3af)
- IR range: up to 30 m
- Support on-board storage, up to 128 GB
- IP67

NC328-MB

8 MP Network Bullet Camera

Specification

Camera	
Image Sensor	1/2.5" Progressive Scan CMOS
Min. Illumination	Color: 0.01 lux @(F1.2, AGC ON), 0 lux with IR
Shutter Speed	1/3 s to 1/100,000 s
Slow Shutter	Support
Lens	2.8 mm, horizontal field of view: 102° 4 mm, horizontal field of view: 79° 6 mm, horizontal field of view: 50° 8 mm, horizontal field of view: 40° 12 mm, horizontal field of view: 23°
Lens Mount	M12
Iris	F2.0
Day &Night	IR cut filter
DNR	3D DNR
Wide Dynamic Range	120dB
3-Axis Adjustment(bracket)	Pan: 0° to 360°, tilt: 0° to 90°, rotate: 0° to 360°
Compression Standard	
Video Compression	Main stream: H.265/H.264 Sub stream: H.265/H.264/MJPEG Third stream: H.265/H.264
H.264 Type	Main Profile/High Profile
H.264+	Support
H.265 Type	Main Profile
H.265+	Support
Video Bit Rate	32 Kbps to 16 Mbps
Image	
Max. Resolution	3840 × 2160
Main Stream	50Hz: 20 fps (3840 × 2160), 25 fps (2560 × 1920, 2560 × 1440, 1920 × 1080, 1280 × 720) 60Hz: 20 fps (3840 × 2160), 30 fps (2560 × 1920, 2560 × 1440, 1920 × 1080, 1280 × 720)
Sub Stream	50Hz: 25fps (640 × 360, 352 × 288) 60Hz: 30fps (640 × 360, 352 × 240)
Third Stream	50Hz: 25fps (1280 ×720, 640 × 360, 352 × 288) 60Hz: 30fps (1280 ×720, 640 × 360, 352 × 240)
Image Enhancement	BLC/3D DNR
Image Settings	Support rotate mode. Brightness, contrast, saturation, and sharpness are adjustable via web browser and client software
ROI (Region of Interest)	Support 1 fixed region for mainstream and sub stream separately
Day/Night Switch	Auto/Scheduled
Network	
Network Storage	Support microSD/SDHC/SDXC card (128G) local storage, NAS (NFS,SMB/CIFS), ANR
Alarm Trigger	Motion Detection, Tampering Alarm, Network Disconnected, IP Address Conflict, Illegal Login, HDD full, HDD error
Protocols	TCP/IP, UDP, ICMP, HTTP, HTTPS, FTP, DHCP, DNS, DDNS, RTP, RTSP, RTCP, PPPoE, NTP, UPnP, SMTP, SNMP, IGMP, 802.1X, QoS, IPv6
Standard	ONVIF (PROFILE S, PROFILE G), PSIA, CGI, ISAPI

NC328-MB

8 MP Network Bullet Camera

General Function	One-key Reset, Anti-Flicker, Heartbeat, Mirror, Password Protection, Privacy Mask, Watermark, IP Address Filter
Interface	
Communication Interface	1 RJ45 10M/100M self-adaptive Ethernet port
On-board Storage	Built-in microSD/SDHC/SDXC slot, up to 128 GB
Smart Feature-set	
Behavior Analysis	Line crossing detection, intrusion detection, unattended baggage detection, object removal detection
Line Crossing Detection	Cross a pre-defined virtual line, up to 1 pre-defined virtual lines supported
Intrusion Detection	Enter and loiter in a pre-defined virtual region, up to 1 pre-defined virtual regions supported
Object Removal Detection	Objects removed from the pre-defined region, such as the exhibits on display.
Unattended Baggage Detection	Objects left over in the pre-defined region such as the baggage, purse, dangerous materials
Face Detection	Human face appears in the image can be detected and trigger linkage method
General	
Operating Conditions	-30 °C to +60 °C (-22 °F to +140 °F), Humidity 95% or less (non-condensing)
Power Supply	12 VDC ± 25%, 7W PoE(802.3af, class 3), 7.5W
IR Range	Up to 30 m
Protection Level	IP67
Dimensions	Camera: Φ70 × 155.03 mm (Φ2.76″ × 6.1″) Package: 216 × 121 × 118 mm (8.5″ × 4.76″ × 4.65″)
Weight	Camera: 410 g (0.9 lb.)

Available Models

NC328-MB

Dimensions

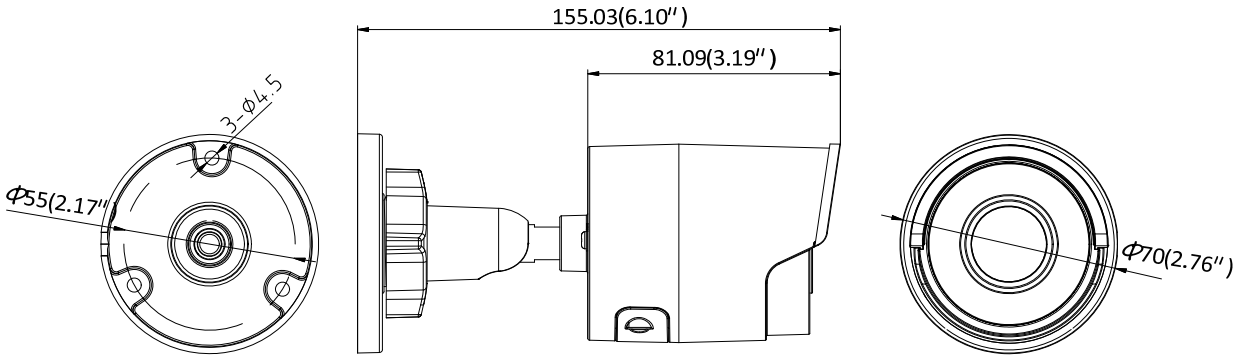

Unit: mm